扬杰科技
YANGJIE TECHNOLOGY

New Product Announcement
新产品发布

High Frequency C3 IGBT Module

Product Introduction

1.The high frequency series IGBT modules mainly have C3(45mm) package;
2.VCES =1200V，IC= 150A~200A；
3.Mainly used in high frequency applications such as motor drives, servo, etc.;
4.The high frequency IGBT modules and other market mainstream products are completely pin to pin alternatives；
5.Environmentally friendly complying with RoHS standards;

Product Features

1.Tjmax=175℃;
2.Low Vce(sat), suitable for low and medium frequency applications；
3.Freewheeling diode with ultra-fast and soft recovery characteristics；
4.With high short-circuit support current capability (above 10us)；
5.Using the insulating baseplate of DBC structure；

Electrical Parameters

TYPE. NO.	Specification	Package	V_{CES}	Structure
MG200HF12TLC3	200A/1200V	C3	1200V	Half-bridge

For more products, please refer to the official website

Application circuits

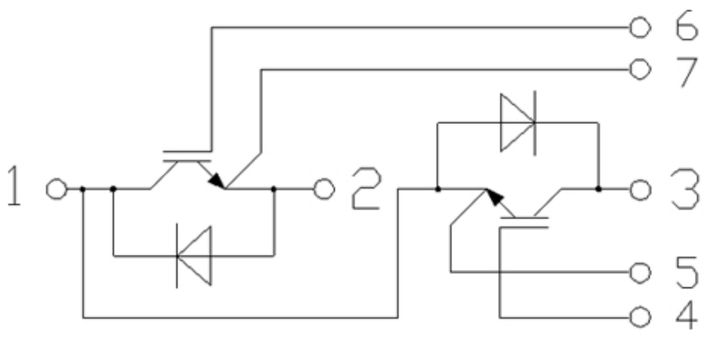

Circuit Diagram

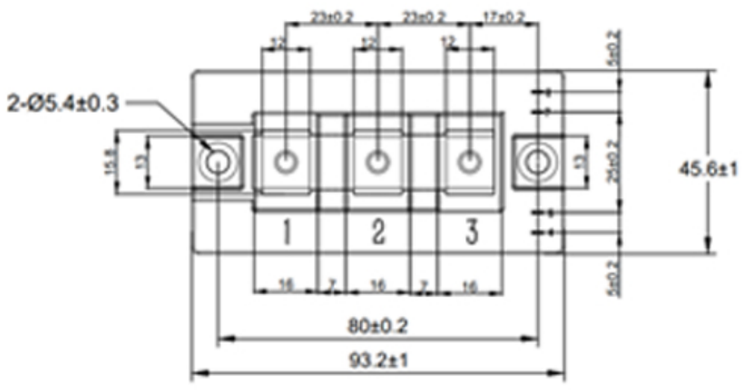

Package Dimensions

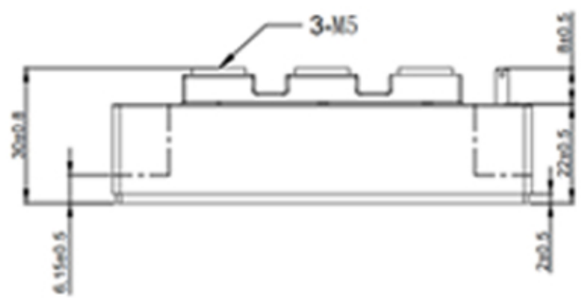

Package Dimensions

Application

Server

Frequency Converters